GER-6455

MULTILIN

*GE Power Management*

# Bus Differential Protection

## Application of PVD Relays Using Different Ratio Current Transformers

## CONTENTS


The Problem . . . . . 3

General Considerations . . . . . 4

Solution No. 1 . . . . . 5

Solution No. 2 . . . . . 5

Solution No. 3 . . . . . 6

Solution No. 4 . . . . . 6

Solution No. 5 . . . . . 7

Solution No. 6 . . . . . 8

Solution No. 7 . . . . . 9

Solution No. 8 . . . . . 11

Figures 1 through 19 . . . . . 12-21

# Application of PVD Relays Using Different Ratio CT's

In some instances it becomes desirable to use PVD relays with current transformers (CT's) of different ratios. For example, an existing bus having four 600-ampere breakers may be protected with PVD relays. In such applications the (600/5) CT's associated with these breakers would all be used on the 600/5 tap. If a new feeder were to be added to this existing bus, and if this new feeder would have a 1200 ampere rating, the associated breaker would normally have 1200/5 CT's. This would create an application problem for the PVD relays which normally require the same CT ratio on all circuits.

In general, it is best to keep the CT ratios all the same. In the example given previously, this can be done by simply ordering the 1200-ampere breaker with 1200/10 CT's for use in the bus-differential protection scheme. If this is not possible or desirable for any reason, and if the rating of the new breaker is twice that of the old breakers, two sets of CT's on the new breaker can be paralleled to obtain the desired ratio. Sometimes, however, the overall problem is overlooked for one reason or another and the Relay Application Engineer finds himself having to cope with two different CT ratios. In such cases, there are several possible solutions to the problem. In some instances, one or more of these may be applicable, but in others none of them may suffice. Thus, each possible solution should be investigated before deciding to eliminate it. The following pages discuss several solutions. It is suggested that solution No. 8 be tried first, because, if it works, it is quite simple to install and it requires no modification to the existing installation.

## THE PROBLEM

Before getting on to the different possible solutions, it might be well to first discuss the basic problem.

The basis of setting the pick-up on the PVD relay is to ensure that neither the 87H or 87L units will pick up to trip the bus for a nearby external fault. The settings are based on the (most severe) assumption that the CT's nearest the fault saturate completely, while the rest of the CT's on all the other breakers saturate not at all. The resulting voltage at the relay is then calculated and used as a basis for setting the 87L and 87H units. These calculations assume that the CT's have no secondary leakage reactance. This assumption is only valid if the CT secondaries are wound on a toroidal core and if the windings (on the tap used) are completely distributed around the cores. Figure 1 illustrates the difference between a completely distributed and a nondistributed secondary winding.

When CT's with two different ratios are involved, it appears that the simple solution would be to use the full winding of the lower ratio CT's and a matching tap on the higher ratio CT's. For example, with 600/5 and 1200/5 CT's, the 600/5 CT's could be used on their full winding, and the 1200/5 CT's could be used on their 600/5 taps. If the 600/5 tap (on the 1200/5 CT) is completely distributed, this would work fine except for one point. On internal faults, the high burden of the PVD relays would result in high CT secondary voltages across the full winding of the 1200/5 CT's. The thyrite units in the PVD will limit the voltage across the 600/5 portions of the windings, but this voltage is amplified by a factor of 2 in the 1200/5 CT. This higher voltage may exceed the capability of the

insulation in the circuit. The basic problem is to limit this voltage to safe values without doing thermal damage to the thyrite units.

Over the years there have been several approaches suggested. These are noted on the following pages, along with appropriate comments. One or more of these schemes may suffice for a given application, or maybe none of them will. In any case, before deciding on a particular approach, the application should be fully checked against the actual existing conditions.

## GENERAL CONSIDERATIONS

The PVD11C, PVD21A, and PVD21B relays contain a thyrite stack that consists of four disks in series. The purpose of this thyrite stack is to limit, to safe values, the peak voltage that can be developed across the PVD relays and the associated wiring and CT's during an internal fault. The magnitude of the peak voltage that can be developed depends on the magnitude of the internal fault current, and on the excitation characteristic of the associated CT's. This information is given by the curves of Figures 3 and 4. In the process of limiting this voltage, the thyrite stack dissipates energy. Information concerning this is given by the curves of Figure 2.

The curves of Figure 2 give the watt-seconds dissipated in each of the four thyrite disks – each half cycle as a function of total (theoretical RMS) symmetrical secondary fault current and the $E_S$ (voltage at the knee of the excitation curve on log-log paper) of the CT's. It should be noted that each thyrite disk is capable of dissipating 1800 watt-seconds of energy. Assuming a PVD operating time of 3 cycles, and a lock out relay time of 1 cycle, the thyrite will be subjected to the total secondary fault current for 4 cycles – or 8 half-cycles. Thus, the maximum dissipation should not exceed 1800/8 or 225 watt-seconds per half cycle.

The abscissa of Figure 2 is given as $E_S$ per thyrite disk. It should be noted that $E_S$ is the voltage taken at the knee of the excitation curve for the CT's used at the tap used. If CT's with different excitation characteristics are used, $E_S$ is taken for the poorest CT. That is, the lowest $E_S$ is used. For example, if the standard PVD11C, PVD21A, or PVD21B is used (it has 4 thyrite disks in series) and if the poorest CT has an $E_S$ of 260 volts on the tap used, $E_S$/thyrite disk would be 65 volts. If the maximum symmetrical secondary internal fault current (assuming no CT saturation) is 200 amperes, each disk will dissipate about 75 watt-seconds per half cycle or a total of 600 watt-seconds in the 4 cycles required to short down the CT's by the lock out relay. This is well within the capability of the thyrite. A completely offset fault current will not result in any greater dissipation and so this need not be considered.

The curves of Figures 3 and 4 give the peak voltage that will be developed across each thyrite disk as a function of $E_S$ and the maximum internal fault current for symmetrical and completely offset currents. To use these curves, the $E_S$ of the poorest CT is divided by the number of disks in series (4 in this case). The maximum symmetrical internal secondary fault current (assuming no CT saturation) is used for both sets of curves to determine the peak voltage developed across each thyrite disk. Four times this value gives the total peak voltage that will appear across studs 5 and 6 of the PVD11C, PVD21A, and PVD21B relays.

For example, consider the same conditions of $E_S$ = 260 and maximum symmetrical fault current of 200 amperes, we get 540 volts per disk from Figure 3 and 490 volts per disk from Figure 4. This indicates that in this case a symmetrical fault current will produce a higher peak than an offset current. The higher of the two values should be used. This yields a maximum peak voltage of 4 x 540, or 2,160 volts.

It is important to recognize that the PVD relays are all hi-potted in the factory at 3750 volts RMS between the coils and the frame, and between the coils and the contacts. A 2500 volts RMS hi-pot is performed between the contacts and the frame. The peak values of these hipots is 5300 and 3500 volts, respectively. We have, however, based our application limits on an assumed hi-pot of 1500 volts RMS (2120 peak) which is the standard for 250 volt equipment. (Twice rating plus 1000 volts.)

When applying PVD relays, in addition to what is outlined in the instruction book, due consideration must be given to the insulation capabilities of the other devices that may be connected to studs 5 and/or 6 of the PVD relay. This includes terminal blocks, leads and cables, current transformers, and any other devices that may be in the CT circuits.

The following list of possible solutions to the problem of mixed CT ratios is in no particular order.

## SOLUTION NO. 1

Possibly the simplest solution is to do nothing but check the higher ratio CT to see if the winding at the desired tap is completely distributed. If yes, then check the curves of Figures 3 and 4 to see if the voltage developed across the PVD and the open ends of the higher ratio CT exceeds safe values. Figure 5 illustrates a typical example.

Use the maximum internal fault current, $E_S$ of the poorest CT (on the tap used), and the curves of Figures 3 and 4 to obtain the peak voltage across studs 5 and 6 of the PVD. Note, for the PVD11C, PVD21A, and PVD21B relays this will be 4 times the value read from the ordinate axis. Add to this the peak value of the drops in the lead and CT winding resistance of the higher ratio CT. This should be done for each of the higher CT ratios in turn. This total voltage is then multiplied by the ratio of total turns to used turns (2 in this case) to obtain the peak voltage developed.

It is up to the user to determine whether the CT and its associated leads and terminal blocks are capable of withstanding this magnitude of peak voltage on an induced voltage test.

The winding to ground voltage that will be developed depends on what part of the CT circuit is grounded. In Figure 5, the lead associated with $X_4$ was selected for grounding because this will result in a lower voltage to ground than if the $X_2$ lead was grounded instead. It is up to the user to determine whether or not the CT and its appurtenances are capable of withstanding the peak voltages to ground.

The curves of Figure 2 should also be checked to make sure that the thyrite will not be overloaded. This should be checked as outlined under "General Considerations" to ensure a dissipation of less than 225 watt-seconds per half cycle per disk.

In addition to the above considerations, the normal procedure for setting and checking the sensitivity of the PVD should be pursued as outlined in the instruction book.

## SOLUTION NO. 2

Use the PVD11D, PVD21C, or PVD21D relays; or use the PVD11C, PVD21A, or PVD21B relays with a second stack of 4 thyrite disks connected externally across studs 3 and 6. In either case, this results in two stacks of 4 thyrite disks in parallel. Make external connections as per Figure 5.

Proceed as in Solution No. 1 except enter the curve of Figures 2, 3, and 4 at a value equal to

half the maximum internal fault current. This is so because each thyrite stack will receive only half the total fault current.

When determining the 87H setting as outlined in the instruction book the following procedure should be used:

a) Use the appropriate curve from Figure 7 in the PVD11 book or from Figure 11 in the PVD21 book.

b) Use the appropriate curve from Figure 9 in the PVD11 book or from Figure 8 in the PVD21 book.

c) When using Figure 10 for the PVD11 relays read into the curves at a total fault current that is one-half of the actual value. Use the curve that indicates twice the actual resistance and then multiply by 2 the setting for 87H as read from the abscissa.

## SOLUTION NO. 3

Reconnect the thyrite stack in the PVD11C, PVD21A, or PVD21B to remove two disks from service. This would leave only two disks connected between studs 3 and 6 in the relay. Make the external connections as per Figure 5. Check the application as in Solution No. 1. The following differences in reading the curves should be noted.

a) When reading Figure 2, the value for $E_S$ per thyrite disk should be based on 2 disks rather than 4.

b) When reading Figures 3 and 4, the value for $E_S$ per thyrite disk should be based on 2 disks rather than 4. The value read for peak volts should be multiplied by 2 rather than by 4.

c) When using the curve of Figure 7 in the PVD11 instruction book or Figure 11 in the PVD21 book, the curve should be entered at twice the actual voltage to obtain the current.

d) When using the curve of Figure 9 in the PVD11 instruction book or Figure 8 in the PVD21 book, the curve should be entered at twice the actual voltage to obtain the current.

e) When using the curves of Figure 10 in the PVD11 instruction book, use the curve marked with twice the actual resistance to obtain the 87H setting.

## SOLUTION NO. 4

Reconnect the thyrite stack in the PVD11C, PVD21A, or PVD21B to be a series-parallel arrangement. Two disks in series, in parallel with the two other disks in series. Make the external connections as per Figure 5. Check the application as in Solution No. 1. The following differences in reading the curves should be observed.

a) When reading Figure 2, the value for $E_S$ per thyrite disk should be based on two disks rather than four. The curve indicating half the actual amperes should be used.

b) When reading Figures 3 and 4, the value for $E_S$ per thyrite disk should be based on two disks rather than four. The curve indicating half the actual amperes should be used. The value read for peak volts should be multiplied by two rather than by four.

c) When using the curve of Figure 7 in the PVD11 instruction book or Figure 11 in the PVD21 book, enter the curve at twice the actual voltage and multiply by two the current read from the curve.

d) When using the curve of Figure 9 in the PVD11 instruction book or Figure 8 in the PVD21 book, enter the curve at twice the

actual voltage and multiply by two the current read from the curve.

e) When using the curves of Figure 10 in the PVD11 book, read into the curves at a total fault current that is half the actual value. Use the curve of resistance that is four times the actual resistance and then multiply by 2 the setting for 87H as read from the abscissa.

## SOLUTION NO. 5

This solution does not require any modifications to the PVD relays. The approach is to use auxiliary CT'S to match the ratios of the different main CT's. These auxiliary CT's must have completely distributed windings on a toroidal core. For this purpose, three bushing CT's similar to those in the breakers using the higher ratio CT's are recommended.

Figure 6 illustrates the connections that would be employed in a typical application where a number of 1200/5 CT's are to be added to an existing scheme that employs 600/5 CT's. In this case, the auxiliary CT's would be a set similar to those in the 1200 ampere breakers. In this sketch it was assumed that originally a junction existed (A, A', A", and B) for the 600/5 CT terminations in the yard. The 600/5 taps on the auxiliary CT's are then connected to this junction. Another junction is assumed for the 1200/5 CT's (XY, X'Y', and X"Y") to which the full winding of the auxiliary CT's are connected as well as the full winding of all the 1200/5 CT's and the PVD relays.

When this scheme is used, it is necessary to establish the maximum voltage that can appear across the PVD relays as a result of external faults. The PVD relays must then be set for twice this value. Figure 7 illustrates how this maximum PVD voltage can be calculated for a fault on one of the 600 ampere circuits. It is assumed (in the standard manner) that the CT, or CT's, associated with the faulted circuit will saturate completely. The voltage drops are then summed back to the auxiliary CT where they are stepped up by a ratio of the total turns to the tap turns (240/120 in this case) and added to the lead drops to the 1200/5 junction (XY). Referring to the equation on Figure 7, the term in the rectangular brackets is the internal voltage in the 120 turns of the auxiliary CT. This is multiplied by 2 to get the internal voltage across the entire winding. From this internal voltage the drop in the center portion of the winding is subtracted and the rise in the end sections and the leads is added to get the net voltage ($V_{XY}$) on the PVD. This voltage should be calculated for faults on each of the 600/5 feeders in turn. It should be done for both single-phase-to-ground and three-phase faults. The highest value obtained for $V_{XY}$ should be recorded.

Figure 8 illustrates how $V_{XY}$ for faults on the 1200-ampere feeders can be evaluated. This should be done for both three-phase and single-phase-to-ground faults on each 1200-ampere feeder in turn. The highest value of $V_{XY}$ should be noted.

The higher of the two high values obtained for $V_{XY}$ from Figures 7 and 8 should then be doubled. This voltage is the minimum permissible setting for the 87L unit.

It appears likely that, in most cases, the 1200-ampere circuits will be the strongest so that faults on the 600-ampere circuits will result in the highest $V_{XY}$. This, however, is not necessarily the case.

When calculating the minimum fault current required to trip 87L the following equation should be used:

$$I_{min} = [I_r + I_1 + (X_1 + 1)I_{e1} + KX_2I_{e2}]\ N$$

where:

$I_r$ = current in 87L relay unit at pick-up voltage of 87L. See the appropriate instruction book.

$I_1$ = current in thyrite limiter circuit at pick-up voltage of 87L. See the appropriate instruction book.

$X_1$ = number of higher current breakers.

$I_{e1}$ = exciting current taken by each higher current CT at a voltage equal to the 87L setting.

$X_2$ = number of lower current breakers.

$I_{e2}$ = exciting current taken by each lower current CT at a voltage equal to K times the voltage setting of 87L.

K = the ratio of the lower to the higher CT rating. In this case 600/1200 or 0.5.

N = secondary turns of higher ratio CT's.

It is important to note that the pick-up voltage setting of the 87L unit in the PVD must not exceed the ES value (voltage at the knee of the excitation curve) of the poorest higher current CT. Also this pick-up setting must not exceed 1/K times the $E_S$ value of the poorest lower current CT, where K is defined above.

THE FOLLOWING THREE SOLUTIONS ARE ALL VARIATIONS OF THE SAME BASIC APPROACH, WHICH IS TO USE THE CT'S IN THE HIGHER RATED BREAKERS AS AUXILIARY CT'S AS WELL AS MAIN CT'S. THESE SCHEMES DO NOT REQUIRE ANY MODIFICATION TO THE PVD NOR DO THEY REQUIRE ANY AUXILIARY CT'S.

## SOLUTION NO. 6

Figure 9 illustrates the connections that would be employed in a typical application where 1200/5 CT's are to be added to an existing scheme that employs 600/5 CT's. In this sketch it was assumed that a junction originally existed (A, A', A", and B) for the 600/5 CT terminations in the yard. The 600/5 taps on one set of the 1200/5 CT's is connected to this same junction. Another junction is assumed for the 1200/5 CT's (XY, X'Y', and X"Y") to which full windings of these CT's are connected as well as the PVD relays. In this way, the CT's on one of the 1200 ampere breakers do double duty. Aside from any other consideration, this scheme has the disadvantage that, if the CT's which are used for the matching function are taken out of service for any reason, the bus differential scheme must be taken out of service.

When this scheme is used, it is necessary to establish the maximum voltage that can appear across the PVD relays as a result of external faults. The PVD relays must be set for twice this value. Figure 10 illustrates how this maximum PVD voltage for a fault on one of the 600 ampere circuits can be calculated. It is assumed (in the standard manner) that the CT or CT's associated with the faulted circuit saturates completely. The voltage drops are then summed back to the "dual purpose" CT's where they are stepped up by the ratio of the total turns to the tap turns (240/120 in this case) and added to the lead drops to the 1200/5 junction (XY). Referring to the equation on Figure 10, the term in the rectangular brackets is the internal voltage in the tapped portion of the "double duty" CT. This is multiplied by P (P = 2 in this case) to get the internal voltage across the entire winding. To this internal voltage the rises in the end sections and leads are added, while the drop in the center section is subtracted, to get the net voltage ($V_{XY}$) on the PVD. This voltage should be calculated for faults on each of the 600/5 feeders

in turn. It should be done for both three-phase and single-phase-to-ground faults. The highest value obtained should be recorded.

Figure 11 illustrates how $V_{XY}$ can be evaluated for faults the feeder associated with the "double duty" CT's. This should be done for both single-phase-to-ground and three-phase faults. The higher value for $V_{XY}$ thus obtained should be recorded.

Figure 12 illustrates how $V_{XY}$ can be evaluated for faults on any of the other higher-rated circuits. Here again this should be done for three-phase and single-phase-to-ground faults on all the higher-rated circuits. The highest value obtained for $V_{XY}$ should be recorded.

The highest of the three values of $V_{XY}$ recorded should then be doubled. This resulting voltage is the minimum permissible setting for the 87L unit.

When calculating the fault current required to trip 87L, the following equation should be used:

$$I_{min} = [I_r + I_1 + X_1 I_{e1} + K X_2 I_{e2}] N$$

where:

$I_r$ = current in 87L relay unit at the pick-up voltage of 87L. See the appropriate instruction book.

$I_1$ = current in thyrite limiter circuit at the pick-up voltage of 87L. See the appropriate instruction book.

$X_1$ = number of higher current breakers.

$I_{e1}$ = exciting current taken by each higher current CT at a voltage equal to the 87L setting.

$X_2$ = number of lower current breakers.

$I_{e2}$ = exciting current taken by each lower current CT at a voltage equal to K times the voltage setting of 87L.

K = the ratio of the lower to the higher CT rating. In this case 600/1200 or 0.5.

N = secondary turns of higher ratio CT's.

It is important to note that the pick-up voltage setting of the 87L unit in the PVD must not exceed the ES value (voltage at the knee of the excitation curve) of the poorest higher current CT. Also this pick-up setting must not exceed 1/K times the $E_S$ value of the poorest lower current CT, where K is defined above.

## SOLUTION NO. 7

Figure 13 illustrates another arrangement that could be employed in a typical application where 1200/5 CT's are to be added to an existing installation that uses 600/5 CT's. This scheme differs from that of Solution 6 in that this scheme parallels the taps on the higher rated CT's while in Solution 6 the full windings are paralleled. In Figure 13 it was assumed that a junction originally existed (A, A', A", and B) for the 600/5 CT terminations in the yard. The 600/5 taps on all the 1200/5 CT's are connected to this same junction. The PVD relays are then connected to the complete winding of only one set of the 1200/5 CT's at XY, X'Y', and X"Y". Aside from any other consideration, this scheme has the disadvantage that, if the CT's used for the matching function are taken out of service for any reason, the bus differential scheme must be taken out of service.

When this scheme is used, it is necessary to establish the maximum voltage that can appear across the PVD relays as a result of external faults. The PVD relays must be set for twice this value. Figure 14 illustrates how this maximum PVD voltage for a fault on one of the 600 ampere

circuits can be calculated. It is assumed (in the standard manner) that the CT or CT's associated with the faulted circuit saturates completely. The voltage drops are then summed back to the "dual purpose" CT's where they are stepped up by the ratio of the total turns to the tap turns (240/120 in this case). Referring to the equation on Figure 14, the term in the rectangular brackets is the internal voltage in the tapped portion of the "double duty" CT. This is multiplied by P (P = 2 in this case) to get the internal voltage across the entire winding. From this, the internal voltage drop in the center section is subtracted to get the net voltage ($V_{XY}$) on the PVD. This voltage should be calculated for faults on each of the 600/5 feeders in turn. It should be done for both three-phase and single-phase-to-ground faults. The highest value obtained should be recorded.

Figure 15 illustrates how $V_{XY}$ can be evaluated for faults on the feeder associated with the "double duty" CT's. This should be done for both single-phase-to-ground and three-phase faults. The higher value for $V_{XY}$ thus obtained should be recorded.

Figure 12 illustrates how $V_{XY}$ can be evaluated for faults on any of the other higher rated circuits. Here again this should be done for three-phase and single-phase-to-ground faults on all the higher-rated circuits. The highest value obtained for $V_{XY}$ should be recorded.

The highest of the three values of $V_{XY}$ recorded should then be doubled. This resulting voltage is the minimum permissible setting for the 87L unit.

When calculating the fault current required to trip 87L, the following equation should be used:

$$I_{min} = [I_r + I_1 + K(X_1 - 1)I_{e1} + KX_2I_{e2} + I_{e3}]\ N$$

where:

$I_r$ = current in 87L relay unit at the pick-up voltage of 87L. See the appropriate instruction book.

$I_1$ = current in thyrite limiter circuit at the pick-up voltage of 87L. See the appropriate instruction book.

$X_1$ = number of higher current breakers.

$I_{e1}$ = exciting current taken by each higher current CT at the tap used and at a voltage equal to K times the voltage setting of 87L.

$X_2$ = number of lower current breakers.

$I_{e2}$ = exciting current taken by each lower current CT at a voltage equal to K times the voltage setting of 87L.

$I_{e3}$ = exciting current taken by "double duty" CT based on the full winding and a voltage equal to the setting of 87L.

K = the ratio of the lower to the higher CT rating. In this case 600/1200 or 0.5.

N = secondary turns of higher ratio CT's.

It is important to note that the pick-up voltage setting of the 87L unit in the PVD must not exceed the ES value (voltage at the knee of the excitation curve) of the "double duty" CT. Also this pick-up setting must not exceed 1/K times the ES value of the poorest lower current CT, nor must it exceed 1/K times the ES value of the poorest higher current CT on the tap used, where K is defined above.

## SOLUTION NO. 8

This scheme is basically a combination of solutions 6 and 7. Figure 17 illustrates the connections. In this approach, the full windings of the higher rated CT's are all paralleled and connected to the PVD relays. The lower rated CT's are all paralleled with all the corresponding taps on the higher rated CT's. In this way each of the higher rated CT's acts as a "double duty" device. That is, each acts as main and auxiliary CT. This has the advantage over Solutions 6 and 7 that any set of CT's can be removed from service without removing the differential protection.

The only difficulty with this scheme is that of calculating the voltage $V_{XY}$ for external faults. This comes about because it is difficult, if not impossible, to determine the current distribution in the CT secondary jumpers. For example, for a fault on one of the 600/5 circuits, it would be difficult to determine how much current would flow in leads $L_a$ and $L_b$, and how much current would flow in leads $L_x$ and $L_y$. Since this information is required to establish the $V_{XY}$ voltage, and hence the PVD setting, a problem exists.

A short-cut conservative approach for obtaining a safe PVD setting for this arrangement is outlined following.

a. Assume that all the lower ratio taps of all the CT's are connected in parallel, and the end windings of the higher ratio CT's are floating. This is shown in Figure 18. Calculate the voltage across the full winding of each high voltage CT for single-phase-to-ground, and three-phase faults just off the bus on each of the lower rated circuits in turn. Note the highest voltage so obtained.

b. Assume that all the lower ratio CT's do not exist, and all the higher voltage CT's are connected in parallel as shown in Figure 19. Calculate the voltage across XY for three-phase and single-phase-to-ground faults just off the bus on each of the higher rated circuits in turn. Note the highest voltage so obtained.

c. Set the 87L unit to pick up at twice the higher of the two voltages noted in (a) and (b).

When calculating the fault current required to trip 87L, the following equation should be used:

$$I_{min}\,[I_r + I_1 + X_1 I_{e1} + KX_2 I_{e2}]\,N$$

where:

$I$ = current in 87L relay unit at the pick-up voltage of 87L. See the appropriate instruction book.

$I_1$ = current in thyrite limiter circuit at the pick-up voltage of 87L. See the appropriate instruction book.

$X_1$ = number of higher current breakers.

$I_{e1}$ = exciting current taken by each higher current CT at a voltage equal to the 87L setting.

$X_2$ = number of lower current breakers.

$I_{e2}$ = exciting current taken by each lower current CT at a voltage equal to K times the voltage setting of 87L.

$K$ = the ratio of the lower to the higher CT rating. In this case 600/1200 or 0.5.

$N$ = secondary turns of higher ratio CT's.

It is important to note that the pick-up voltage setting of the 87L unit in the PVD must not exceed the ES value (voltage at the knee of the excitation curve) of the poorest higher current CT. Also this pick-up setting must not exceed 1/K times the ES value of the poorest lower current CT, where K is defined above.

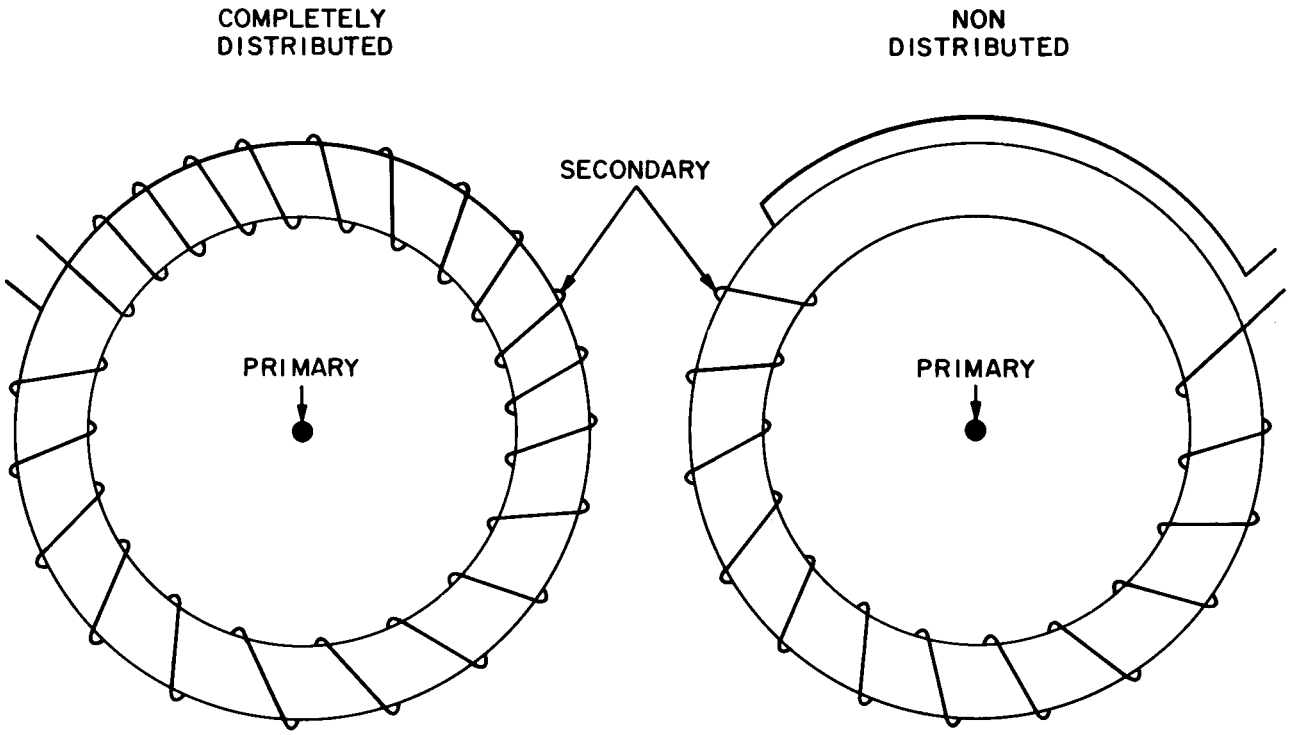


*Figure 1. Depiction of completely distributed and non-distributed current transformers*

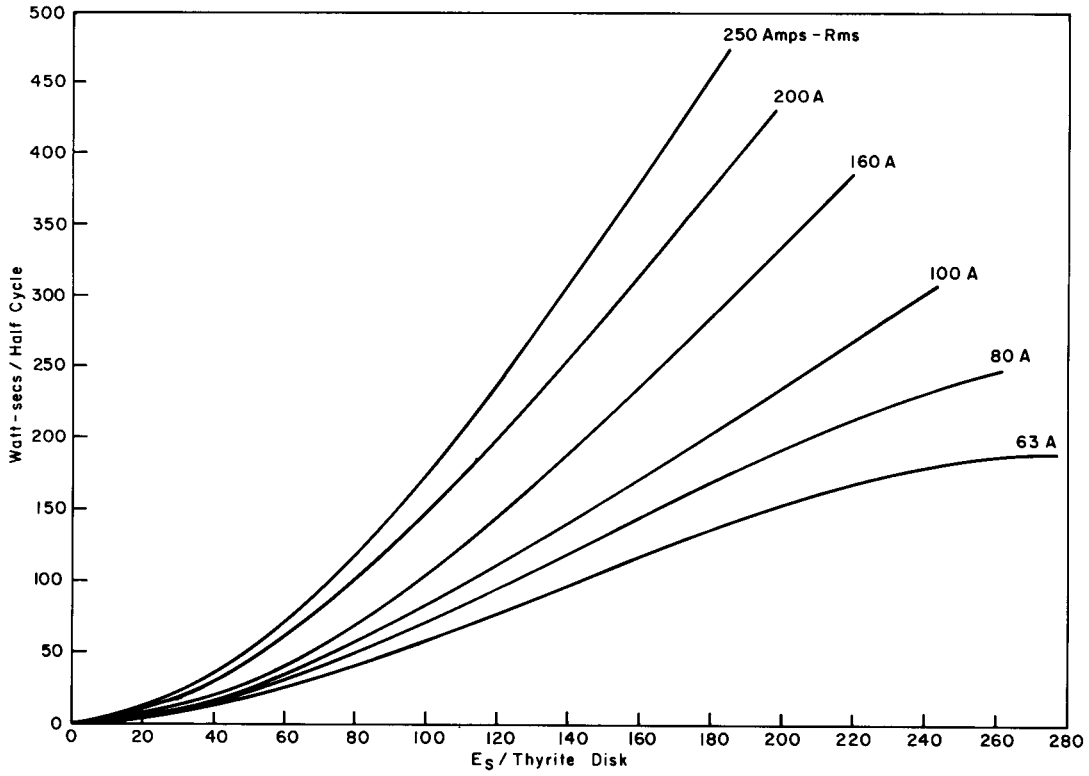


*Figure 2. Energy dissipated in each thyrite disk per half cycle — based on symmetrical sine wave current until CT saturation*

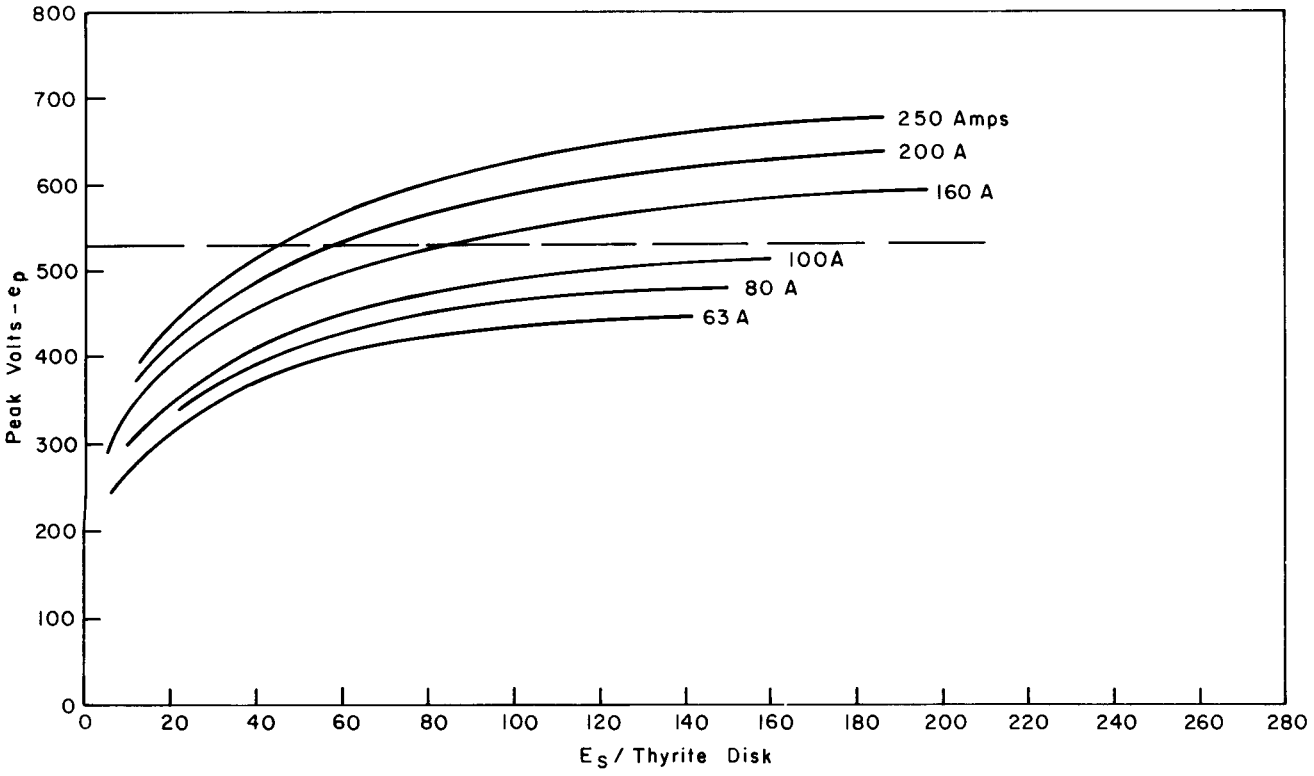


*Figure 3. Peak voltage developed across each thyrite disk — based on symmetrical sine wave current until CT saturation*

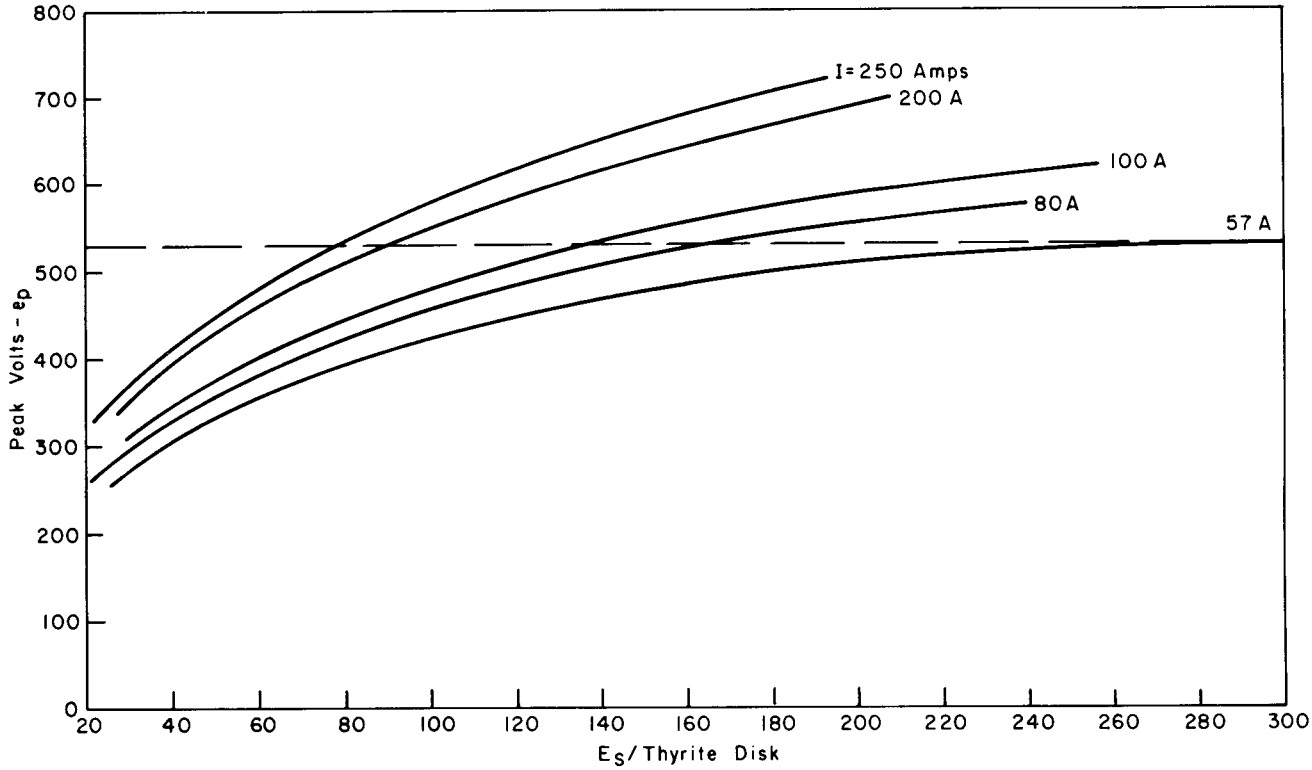


*Figure 4. Peak voltage developed across each thyrite disk — based on completely offset sine wave current until CT saturation*

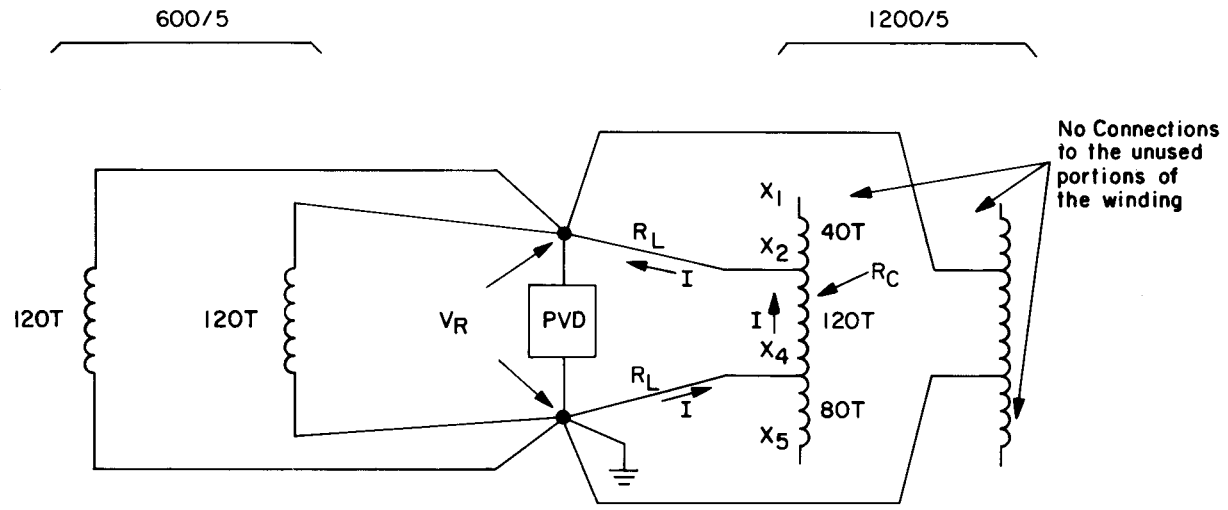


$$V_{X1-X5} \approx 2\left[V_{R(peak)} + I(KR_L + R_C)\sqrt{2}\right]$$

$$V_{X1-GD} \approx 1.33\left[V_{R(peak)} + I(KR_L + R_L)\sqrt{2}\right]$$

K is 1 for three-phase faults, 2 for single-phase-to-ground faults.

*Figure 5*

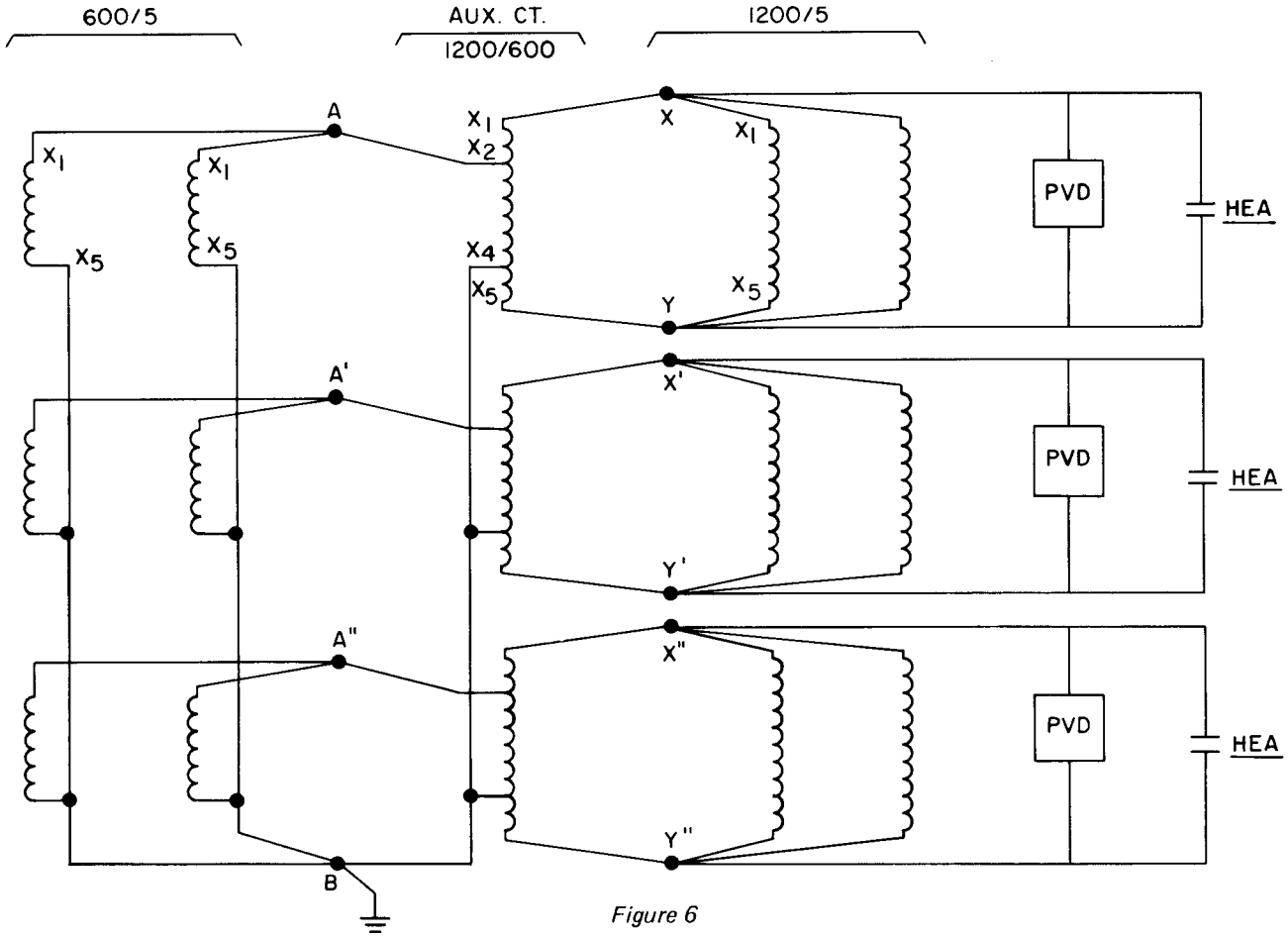


*Figure 6*

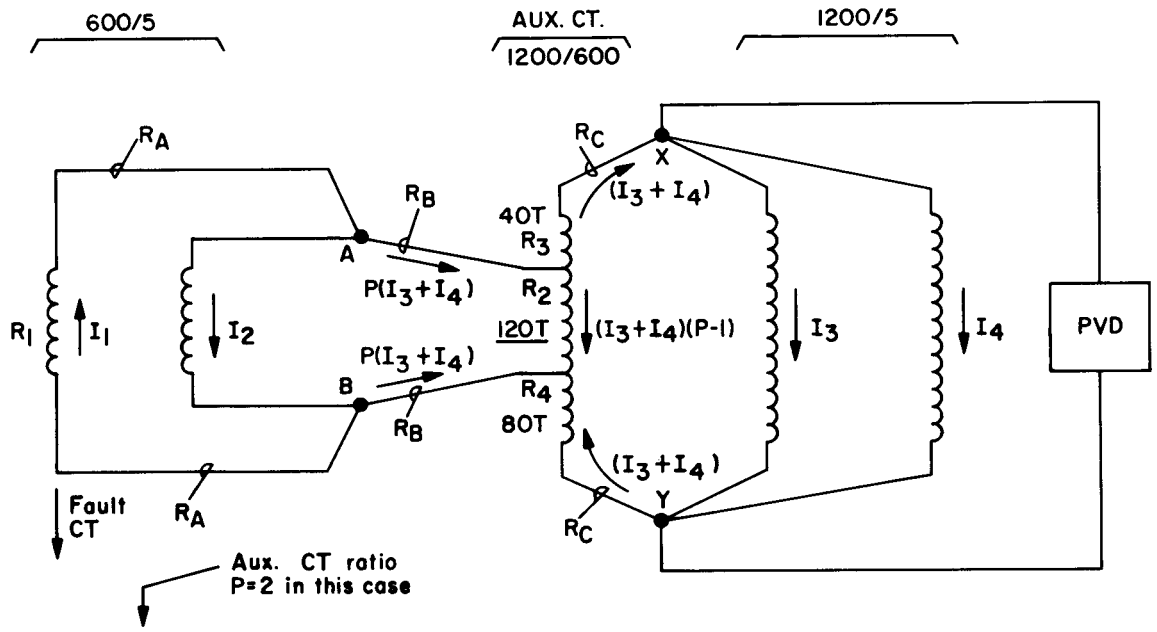


$$V_{XY} = P\,[I_1\,(R_1 + K\,R_A) + P\,(I_3 + I_4)\,(R_2 + K\,R_B) - (I_3 + I_4)\,R_2] + (I_3 + I_4)\,(R_3 + R_4 + 2\,R_C - [P - 1]\,R_2)$$

K = 1 for three phase faults, 2 for single-phase-to-ground faults

Note: $I_1$ is the secondary current being pushed through the CT on the faulted circuit. This current is equal to the primary current in that CT divided by its ratio.

$I_2$, $I_3$ & $I_4$ are the secondary currents in the respective CT's for the assumed fault location.

*Figure 7*

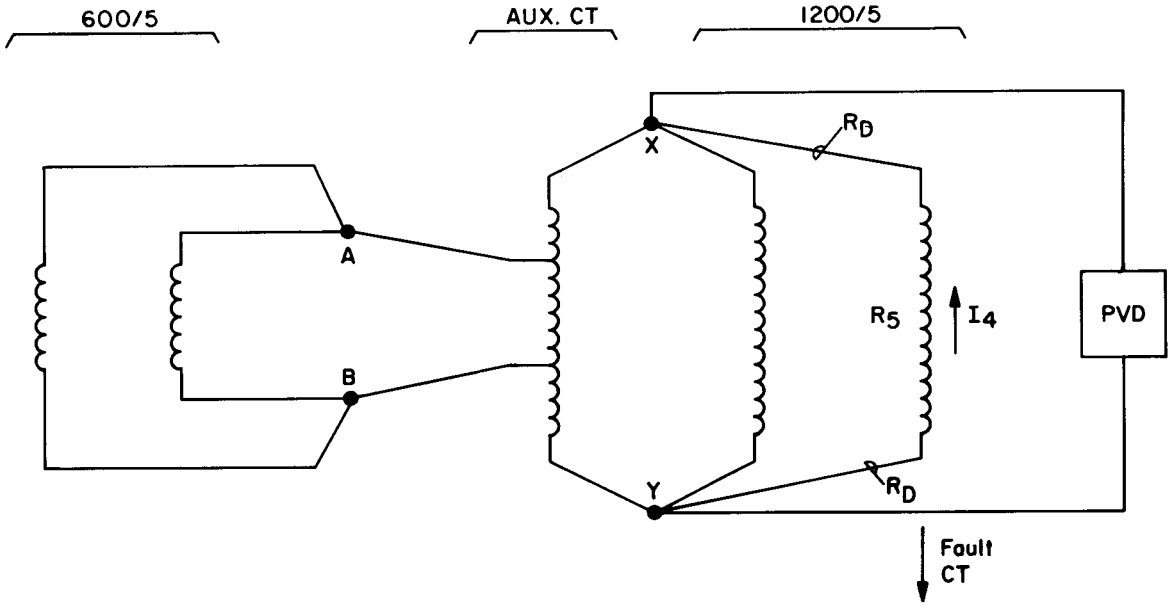


$$V_{XY} = I_4\,(R_5 + 2R_D)$$

Note: $I_4$ = the secondary current being pushed through the CT on the faulted circuit. This current is equal to the primary current in that CT divided by its ratio.

*Figure 8*

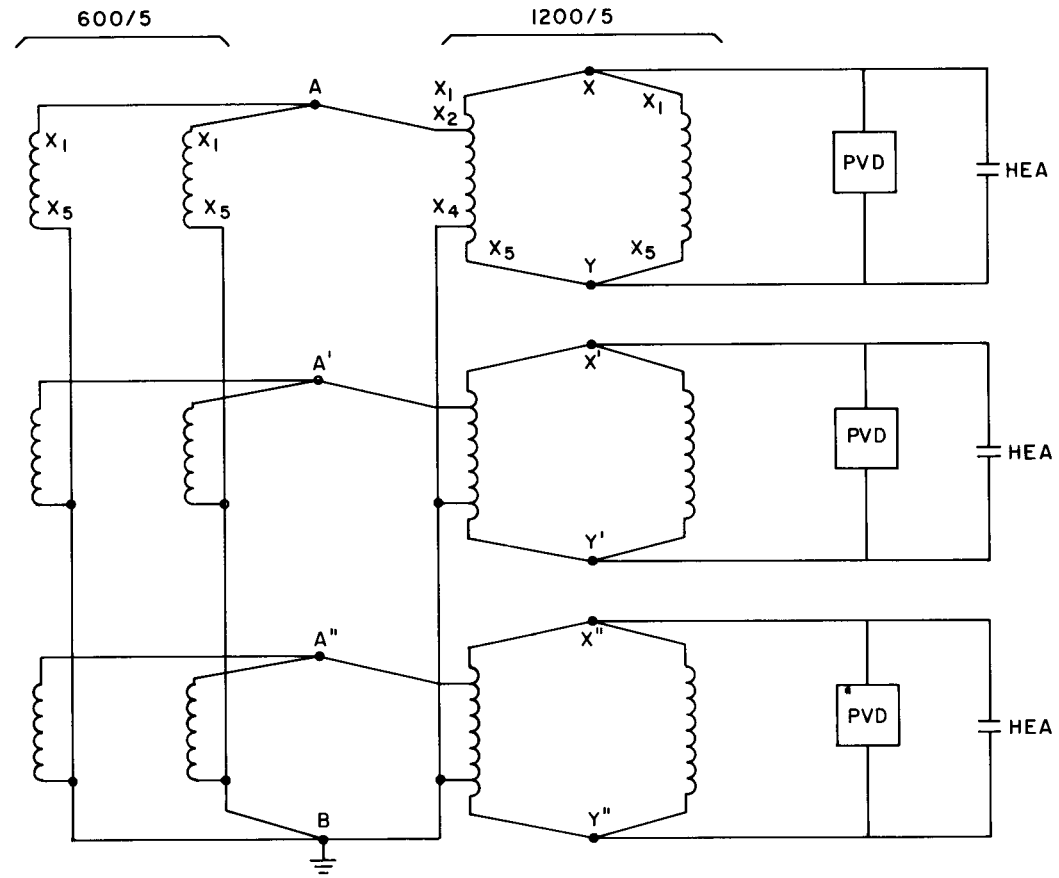


*Figure 9*

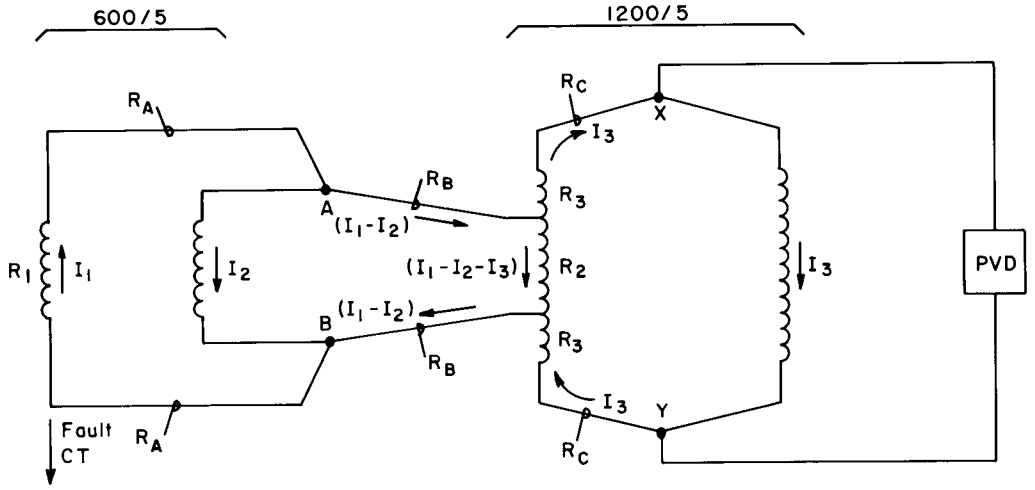


$$V_{XY} = P\,[(R_1 + K\,R_A)\,I_1 + K\,R_B\,(I_1 - I_2) + R_2\,(I_1 - I_2 - I_3)] + (R_3 + R_4 + 2\,R_C)\,I_3 - R_2\,(I_1 - I_2 - I_3)$$

K = 2 for single-phase-to-ground faults, 1 for three phase faults.

P = Ratio of total turns to tap turns on higher rated CT. = 2 in this case.

Note: $I_1$ is the secd'y current being pushed through the CT on the faulted circuit. This current is equal to the primary current in that CT divided by its ratio.

$I_2$ & $I_3$ are the secondary currents in the respective CT's for the assumed fault location.

*Figure 10*

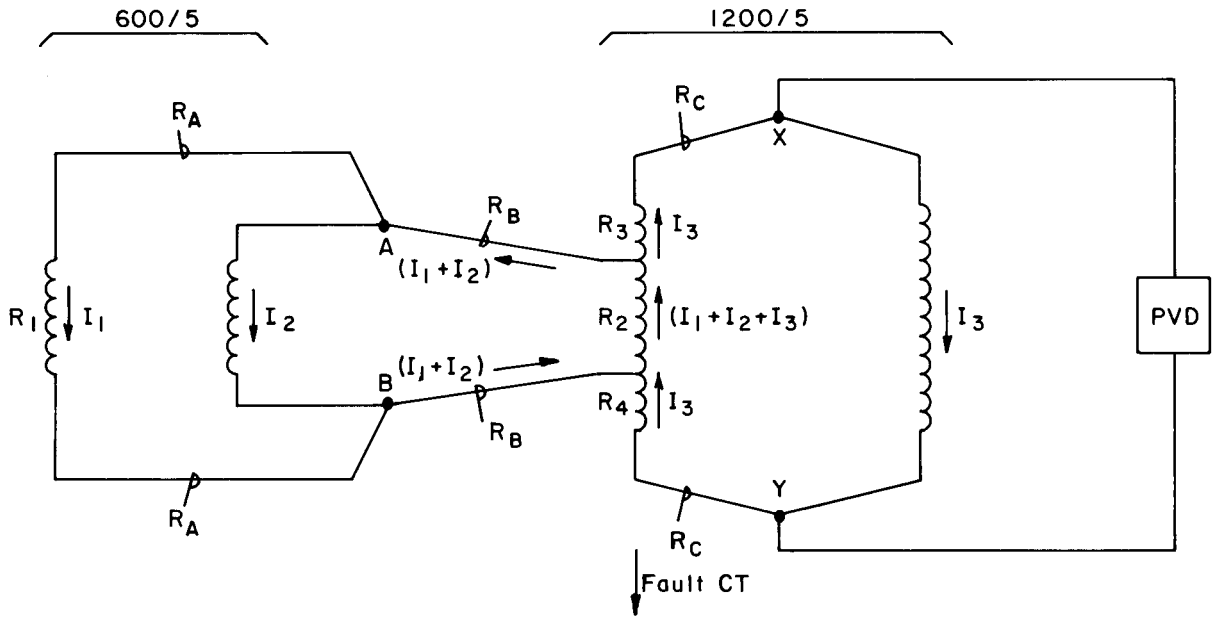


$V_{XY} = (I_1 + I_2 + I_3) R_2 + I_3 (R_3 + R_4 + 2 R_C)$

Note: $I_1$, $I_2$, & $I_3$ are the secondary currents in the respective CT's for the assumed fault location.

*Figure 11*

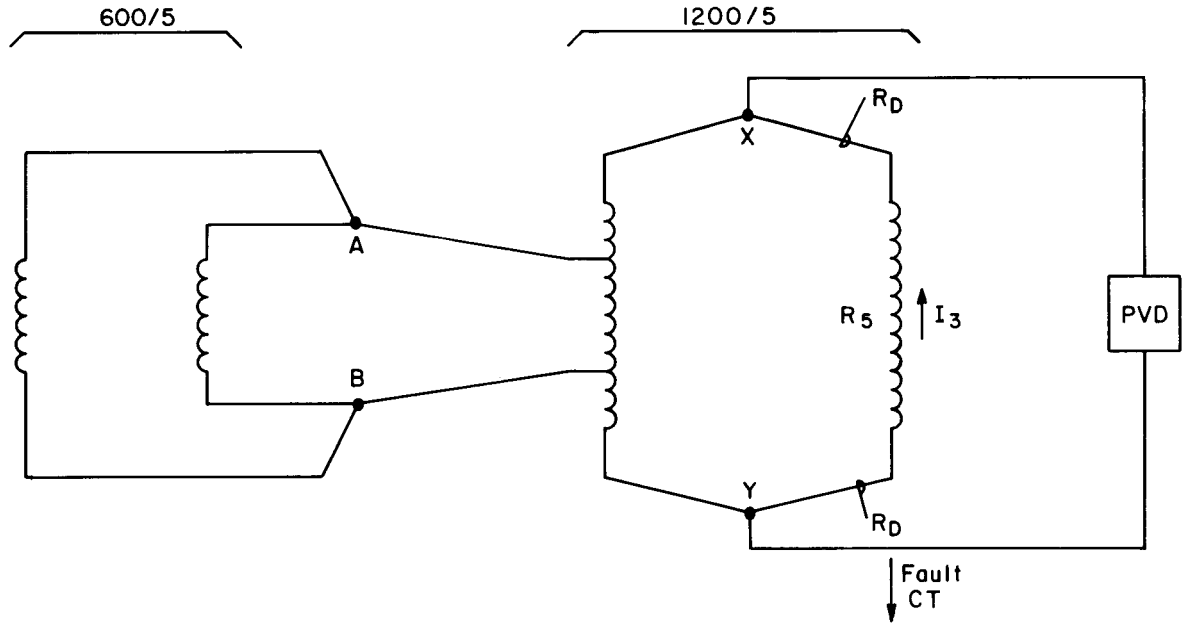


$V_{XY} = I_3 (R_5 + 2R_D)$

Note: $I_3$ is the secondary current being pushed through the CT on the faulted circuit. This current is equal to the primary current in that CT divided by its ratio.

*Figure 12*

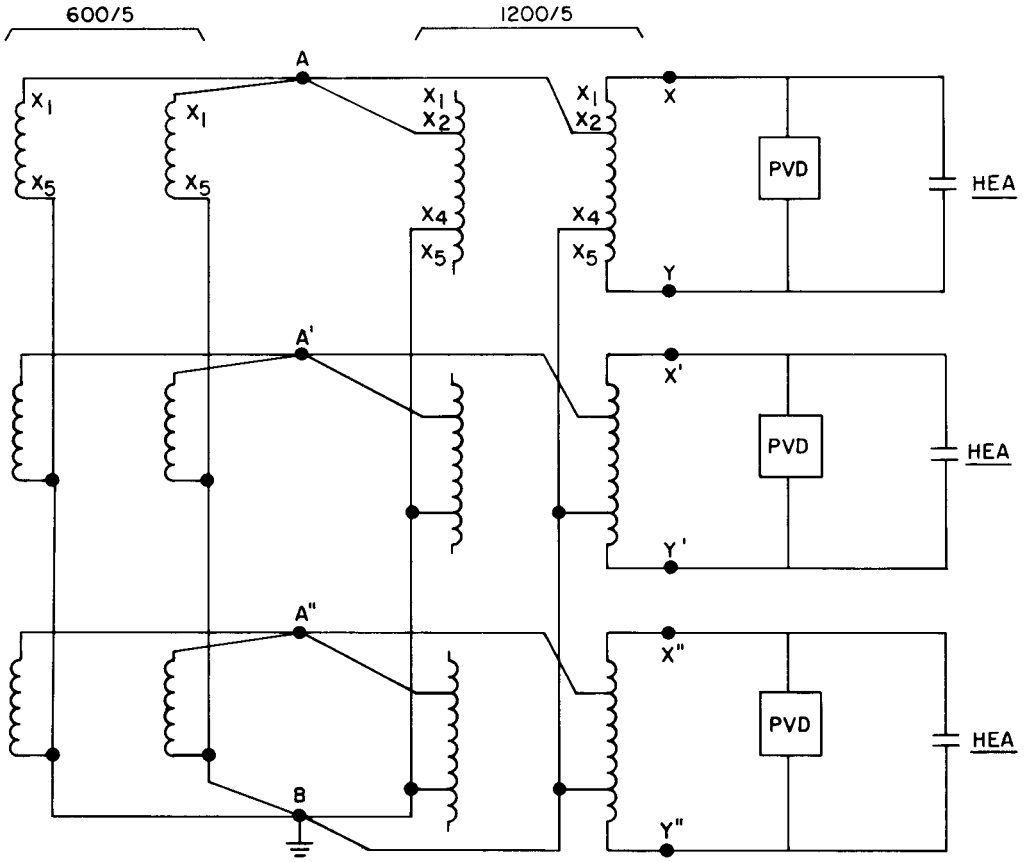


*Figure 13*

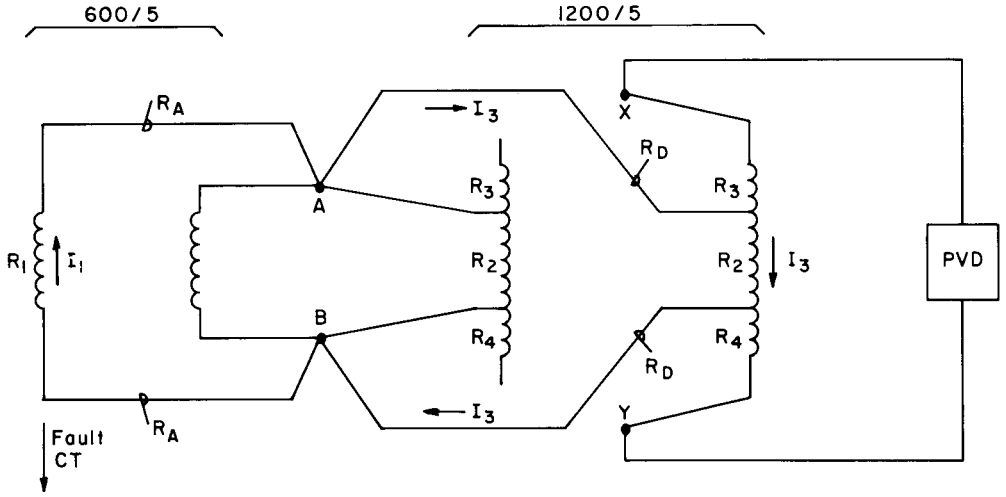


$V_{XY} = P\,[I_1\,(R_1 + KR_A) + I_3\,(R_2 + KR_D)] - I_3\,R_2$

K = 1 for three-phase faults, 2 for single-phase-to-ground fault

P = Ratio of total turns to tap turns on higher rated CT. = 2 in this case.

Note: $I_1$, is the secondary current being pushed through the CT on the faulted circuit. This current is equal to the primary current in that CT divided by its ratio.

$I_3$ is the secondary current in its CT for the assumed fault location.

*Figure 14*

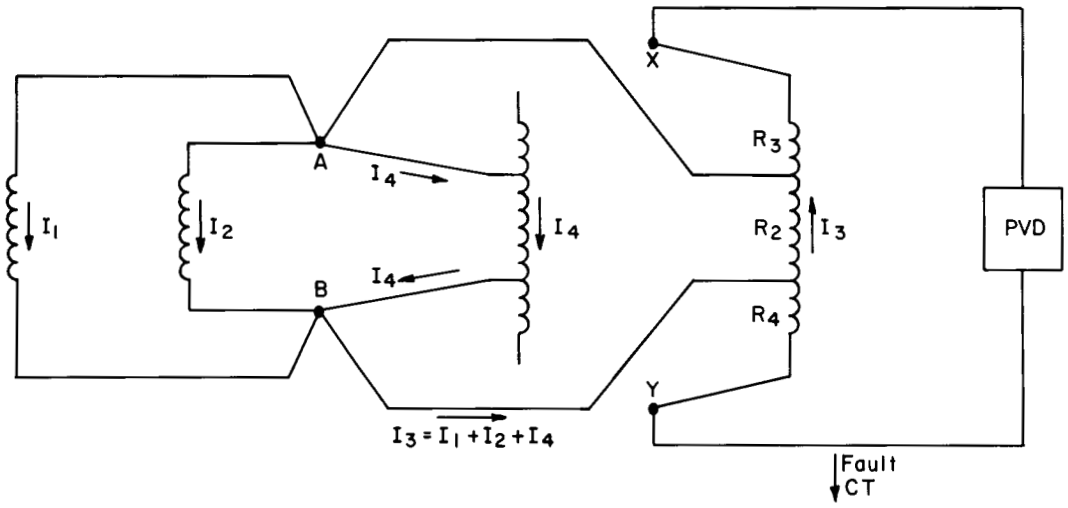


$V_{XY} = R_2 I_3$

Note: $I_3$ is the secondary current being pushed through the CT on the faulted circuit. This current is equal to the primary current in that CT divided by its ratio on the tap used.

$I_1$, $I_2$, & $I_4$ are the secondary currents in the respective CT's for the assumed fault location.

*Figure 15*

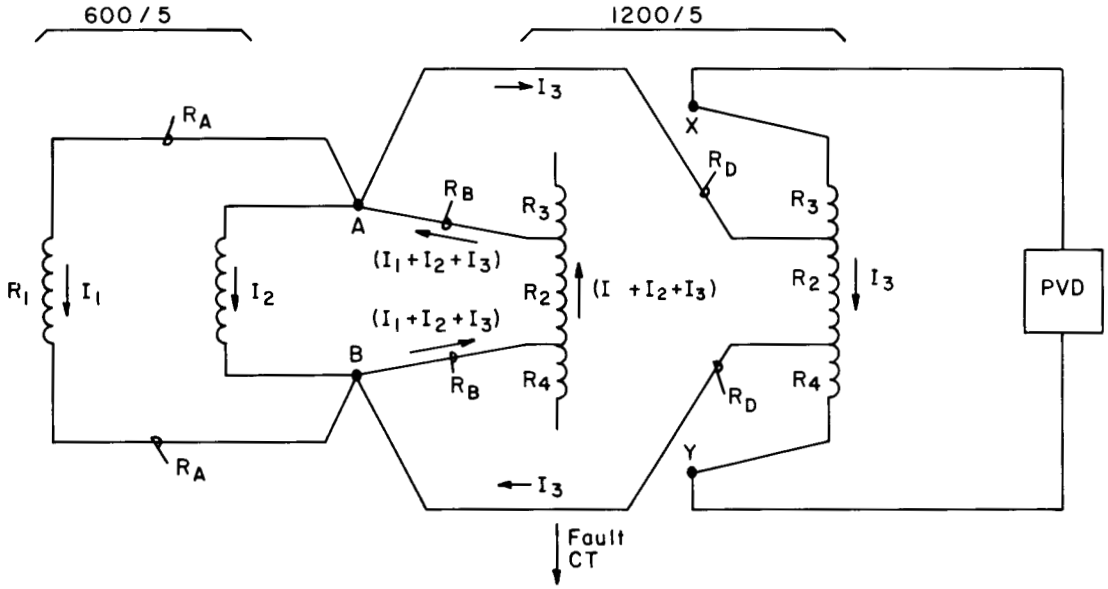


$V_{XY} = 2\,[(I_1 + I_2 + I_3)\,(R_2 + KR_B) + I_3\,(R_2 + KR_D)] - R_2 I_3$

K = 1 for three-phase faults, 2 for single-phase-to-ground faults.

P = Ratio of total turns to tap turns on higher rated CT. = 2 in this case.

Note: $(I_1 + I_2 + I_3)$ is the secondary current being pushed through the CT on the faulted circuit. This current is equal to the primary current in that CT divided by its ratio on the tap used.

The individual currents $I_1$, $I_2$, & $I_3$ are the secondary currents in the respective CTs for the assumed fault location.

*Figure 16*

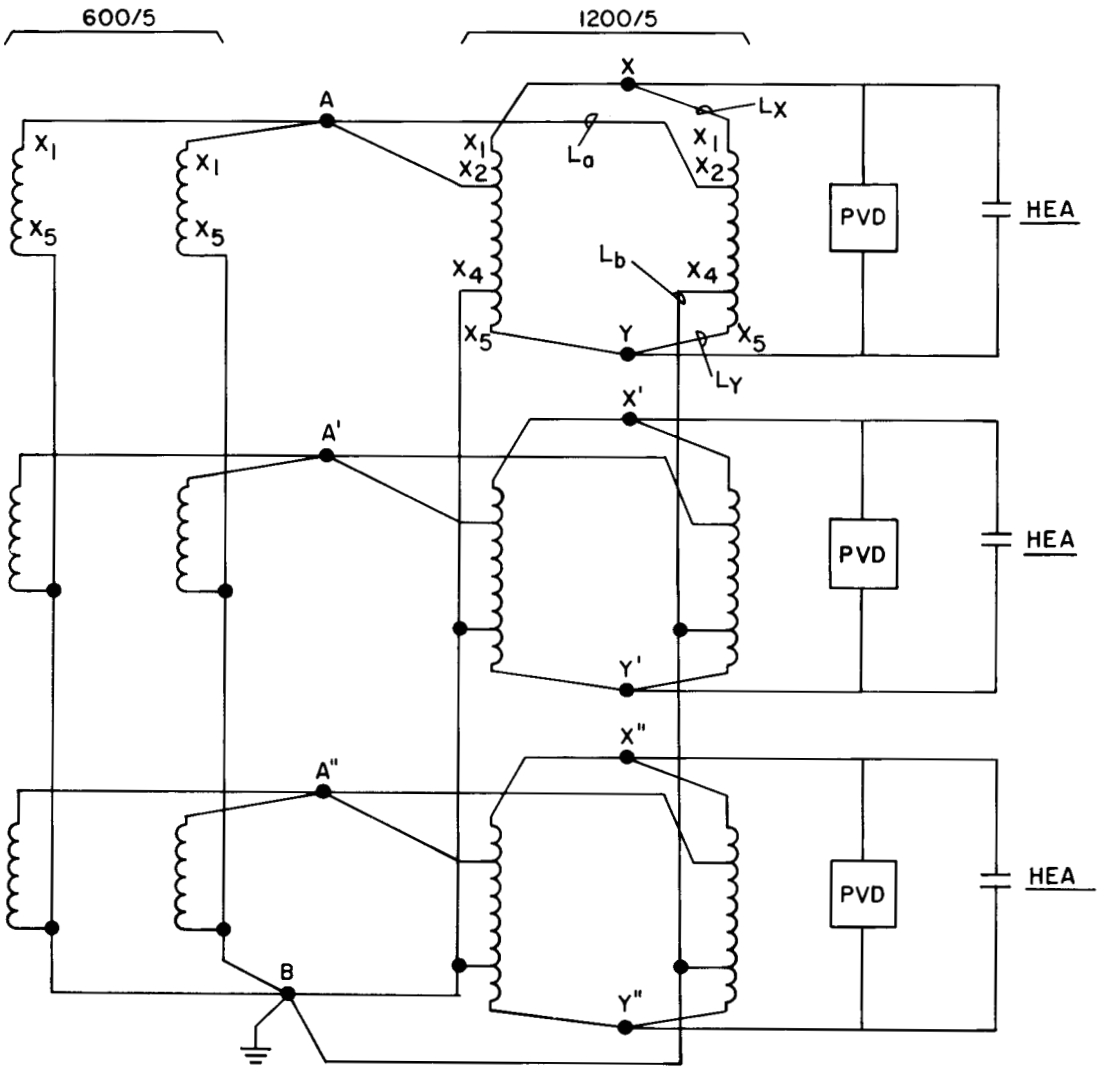
600/5
1200/5
X
A
$L_X$
$X_1$
$X_1$
$X_1$
$X_1$
$X_2$
$X_2$
$L_a$
$X_5$
$X_5$
PVD
HEA
$L_b$
$X_4$
$X_4$
$X_5$
Y
$X_5$
$L_Y$
X'
A'
PVD
HEA
Y'
X"
A"
PVD
HEA
B
Y"

*Figure 17*

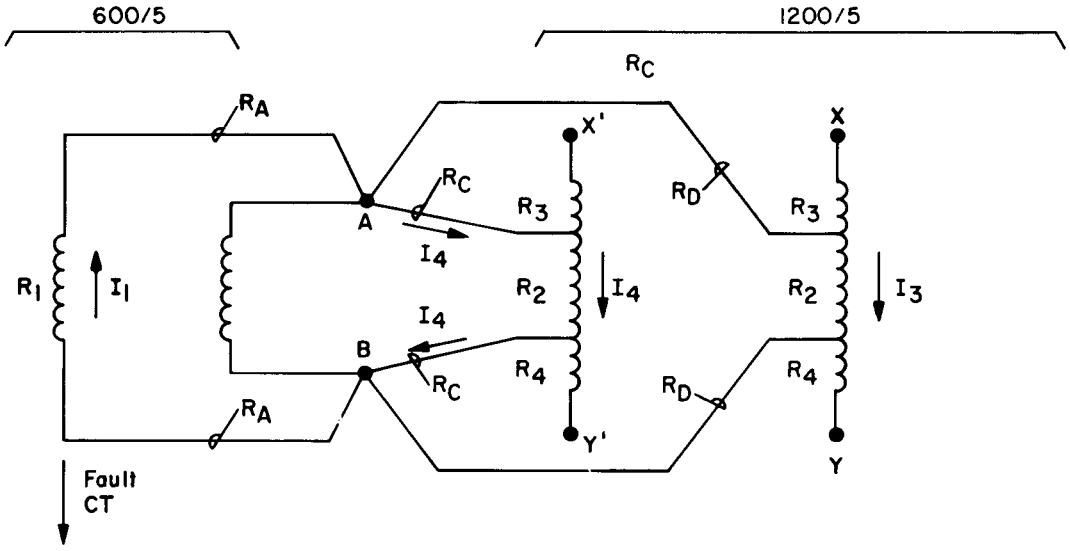


$$V_{XY} = P\,[I_1\,(R_1 + KR_A) + I_3\,(R_2 + KR_D)] - I_3\,R_2$$

$$V_{X'\,Y'} = P\,[I_1\,(R_1 + KR_A) + I_4\,(R_2 + KR_C)] - I_4\,R_2$$

K = 1 for three-phase faults, and 2 for single-phase-to-ground faults
P = Ratio of total turns to tap turns on higher ratio CT. 2 in this case.

Note: $I_1$ is the secondary current being pushed through the CT on the faulted circuit. This current is equal to the primary current in that CT divided by its ratio.

$I_3$ & $I_4$ are the secondary currents in the respective CT[s for the assumed fault location.

*Figure 18*

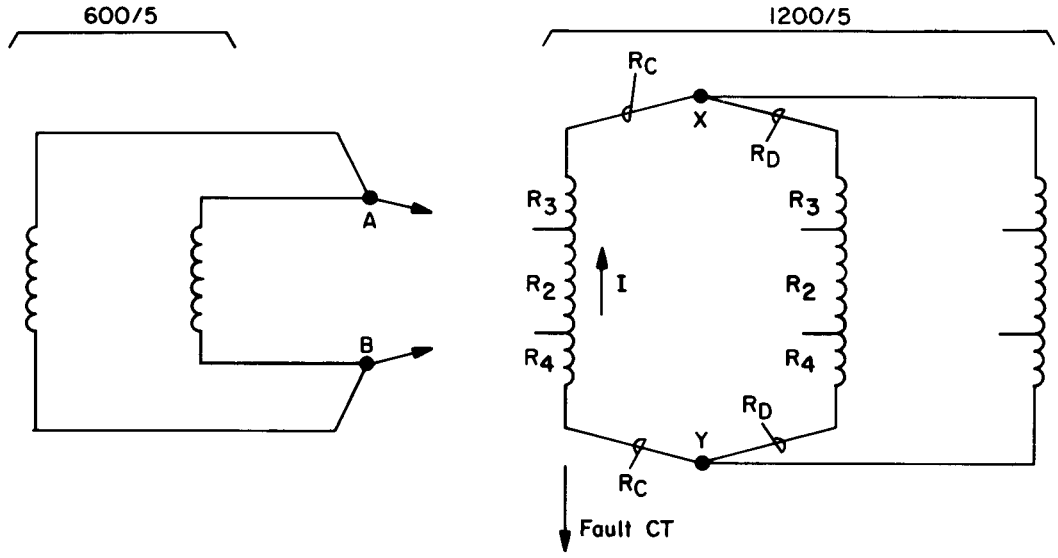


$$V_{XY} = I\,(R_2 + R_3 + R_4 + 2R_C)$$

Note: I is the total current in the primary of the fault CT divided by the full CT ratio.

*Figure 19*